REVISIONS			DWG. NO. 150-SA-FMN-XX	SHEET 1	REV A
ZONE	REV	DESCRIPTION	DATE	APPROVED	
	A	RELEASED TO PRODUCTION	11-22-02	MRV	

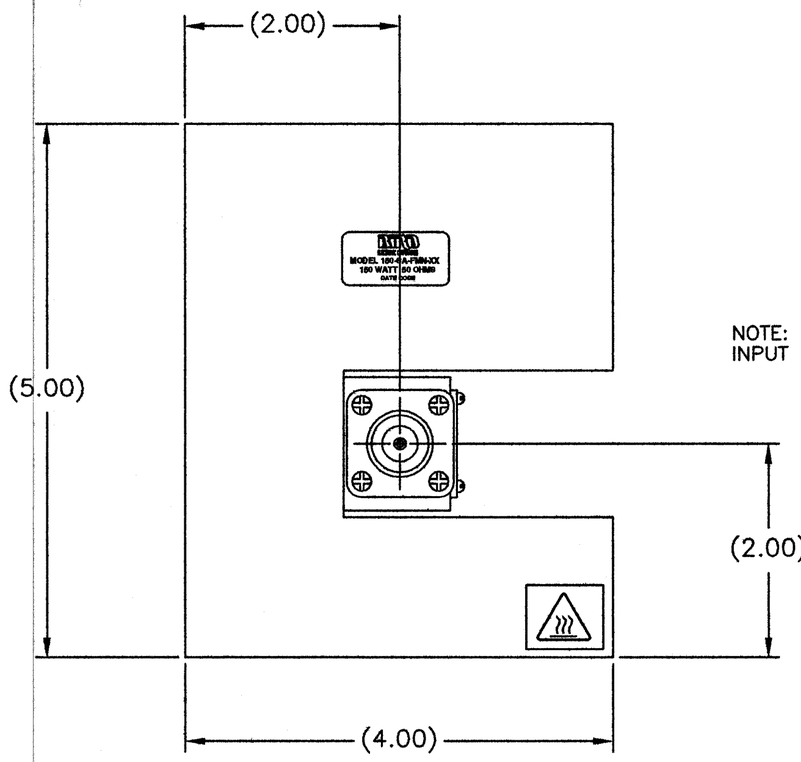

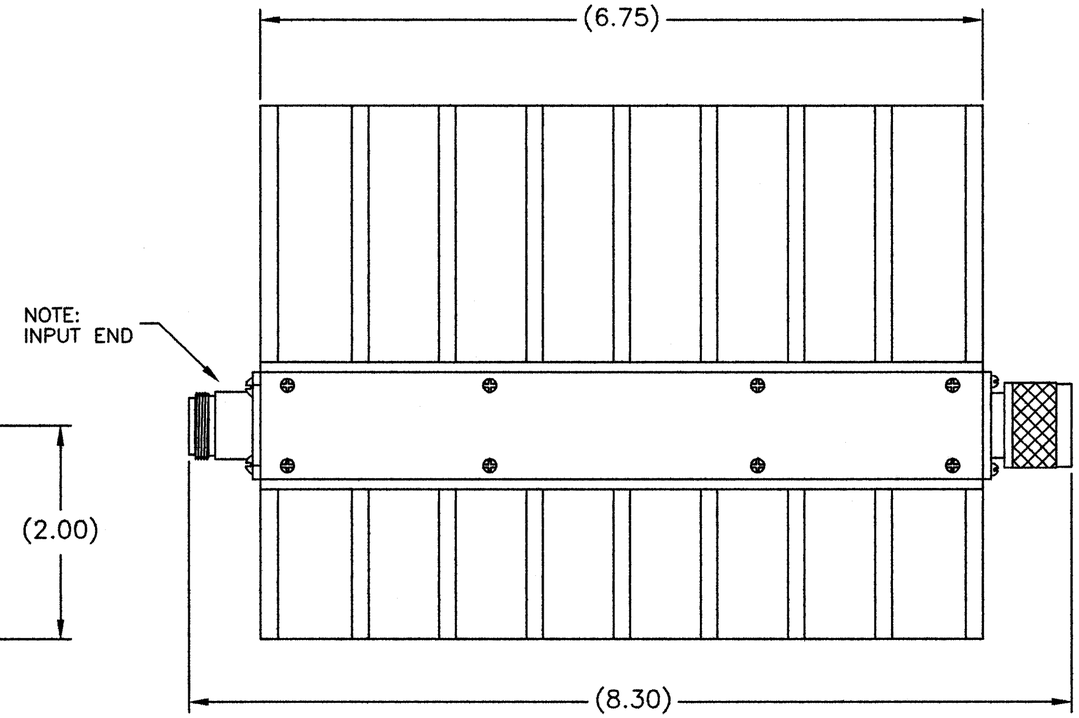

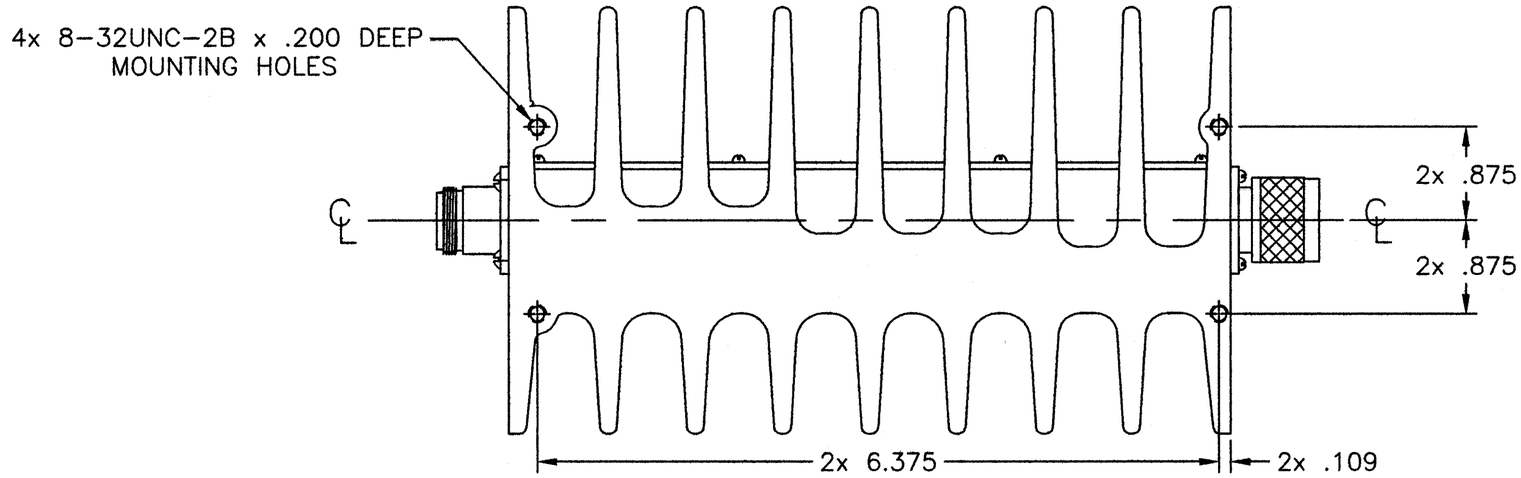

IMPEDANCE: 50 OHMS NOMINAL
FREQUENCY RANGE: DC TO 2.4GHz
VSWR: DC TO 1GHz AT 1.10:1 MAX.
1GHz TO 2.4GHz AT 1.25:1 MAX.
POWER RATING: 150 WATTS MAX. @ 40°C.
180 WATTS MAX. @ 25°C.
COOLING FIN: ALUMINUM, BLACK ANODIZED
HEAT SPREADER: ALUMINUM, TRI-ALLOY PLATED
CONNECTORS: N-TYPE FEMALE/MALE, TRI-ALLOY PLATED
OPERATING POSITION: VERTICALLY
NOMINAL SIZE: APPROX. 8.30" L. X 5.00" H X 4.00" W
WEIGHT: APPROX. 5.5 LBS.

XX = DASH NUMBER (dB VALUE)

DASH NO.	dB ATTEN.	DC – 1GHz ATTENUATOR ACCURACY ±dB	1 – 2.4GHz ATTENUATOR ACCURACY ±dB
-30	30	±0.8 dB	±1.3 dB
-20	20	±0.5 dB	±1.0 dB
-10	10	±0.4 dB	±0.8 dB
-06	6	±0.4 dB	±0.6 dB
-03	3	±0.3 dB	±0.5 dB
-02	2	±0.3 dB	±0.5 dB
-01	1	±0.3 dB	±0.5 dB

UNLESS OTHERWISE SPECIFIED DIMENSIONS ARE IN INCHES
TOLERANCES ARE:
FRACTIONS ±1/64 DECIMALS .XX=±.010 .XXX=±.005 ANGLES ±30'
MILLIMETERS .X=±.4 .XX=±.12
DO NOT SCALE DRAWING
MATERIAL
FINISH

THIS DRAWING IS THE PROPERTY OF THE BIRD ELECTRONIC CORPORATION. THE DESIGNS AND SPECIFICATIONS DISCLOSED HEREON ARE PROPRIETARY AND SHALL NOT BE REPRODUCED, NOR COPIED, NOR USED AS THE BASIS FOR THE MANUFACTURE OR SALE OF APPARATUS OR DEVICES WITHOUT THEIR EXPRESS WRITTEN CONSENT.

APPROVALS		DATE
DRAWN	D.M.RINK	11-22-02
CHECKED		
APPROVED	MARK V	12-2-02
		AUTOCAD

Bird Electronic Corporation
Cleveland (Solon) Ohio USA

TITLE: ATTENUATOR, N-TYPE FEMALE/MALE, 150W

SIZE	FSCM NO.	DWG. NO.	REV
C	70998	150-SA-FMN-XX	A
SCALE 1:1	COMM CODE AT1	SHEET 1 OF 1	